REVISIONS			
LTR	DESCRIPTION	DATE	APPROVAL
A	ORIGINAL		

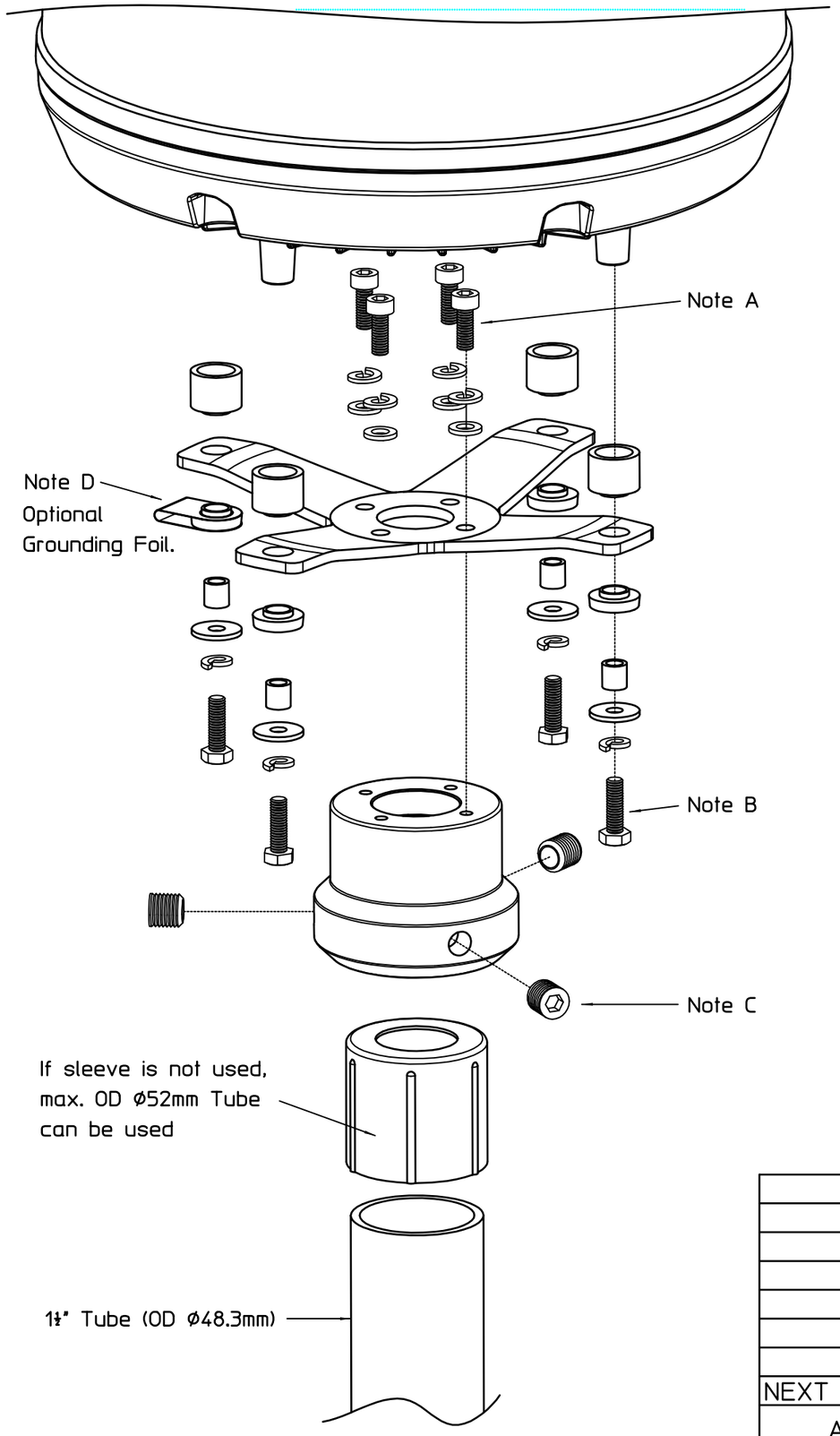

Note D:
Bending of the Grounding Foil.
Diameter of tool approx. ø 4mm.

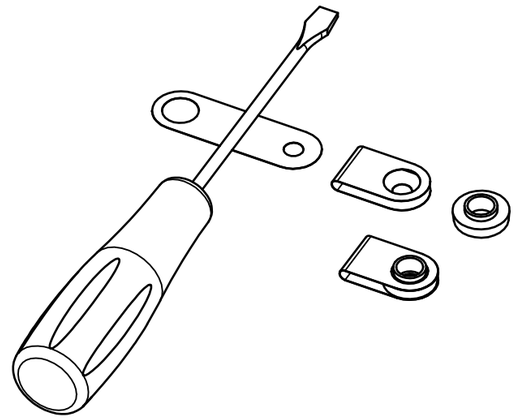

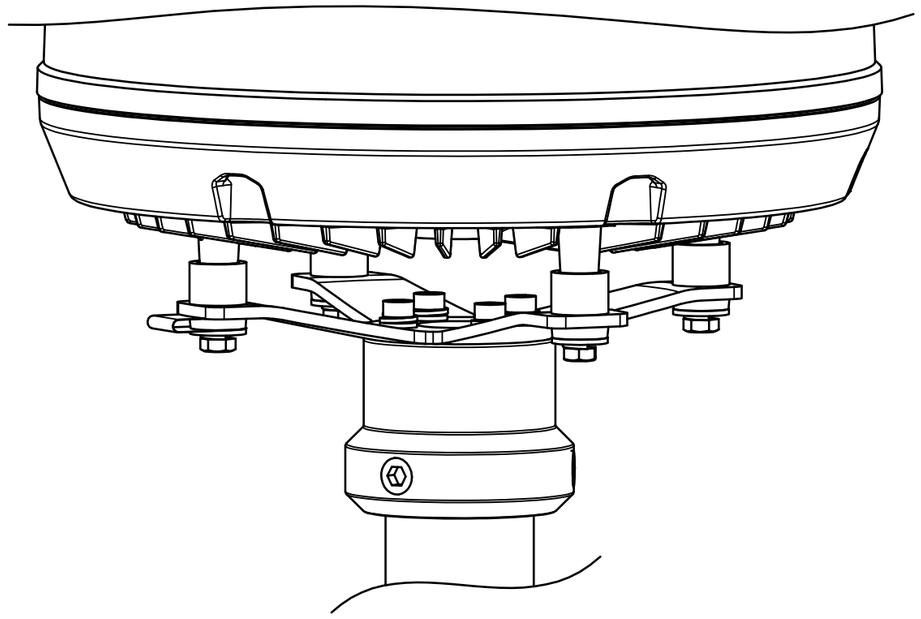

Note A:
Recommended torque: 8 Nm

Note B:
Recommended torque: 8 Nm

Note C:
Recommended torque: 30 Nm

Do not exceed recommended torque.

	TT-3050A
NEXT ASSY	USED ON
APPLICATION	

UNLESS OTHERWISE SPECIFIED DIMENSIONS ARE IN MILLIMETRES AND TOLERANCES ARE IN ACCORDANCE WITH DS/ISO 2768-1 F

ANGLES
LIN. DIM.

MATERIAL

DR.	Ole Brix Larsen	15.11.2007
CH.	Jesper Sundberg	15.11.2007
AP.	Ole Brix Larsen	15.11.2007
AP.		

FIRST ANGLE PROJECTION

Thrane & Thrane
Telecommunications Engineering Copenhagen Denmark

TITLE
Assembly Instruction for
Mast Mount Kit 403742A-920

SIZE	CODEIDENT NO.	DRAWING NO
A3		TT97-126642
SCALE 1:1		SHEET 1 OF 1

41-121447 Rev.A